Appendix A – Recommended Amendments to Transport Chapter

KEY

Red Underlined – Additions recommended as part of right of reply

~~Red Strikethrough~~ – Deletions recommended as part of right of reply

TRANSPORT - TRANS

Overview

Transport is fundamental to the functioning of the District, regardless of whether it is by motorised means (cars, trucks, buses, train or *aircraft*) or non-motorised (walking, running or cycling). Indeed, the viability of the Gore economy requires safe, effective and efficient *transport networks.*

The objectives and policies in this chapter are intended to apply to all transport modes. However, the rules do not apply to activities undertaken by requiring authorities in areas that are subject to designations, such as some railways and *roads* (for example ~~Waka Kotahi~~ New Zealand Transport Agency undertaking road maintenance on a state highway) but do apply if works re undertaken outside of the area of designation. Under the designation procedure, for both existing and proposed works, the Council has the opportunity of recommending *conditions* as to the way works are constructed and operated.

The intent of the rules in the District Plan is two-fold:

- Firstly, to manage the environmental *effects* of transport activities. These *effects* can include noise, vibration, *glare* and *dust*.
- Secondly, to avoid *reverse sensitivity effects*, and to maintain safety, rules are included in this chapter and elsewhere in the District Plan, for example *Noise* and Zone *setback* standards, managing some activities adjoining railways and state highways.

The use of *aircraft* within the Gore District gives rise to a number of different issues. The Council recognises the importance of agricultural aviation services and private use of *aircraft* in *rural areas*, and these activities are considered in the General Rural Zone chapter. The ground operations at the Mandeville and Charlton airfields, including for commercial aviation activities, are considered in the Settlement and Airport Zones respectively, while the *height* of *structures* in close proximity to the airspace used for the take-off and landing of *aircraft* at these airfields is included in the Transport chapter. Agricultural aviation is managed in the General Rural Zone chapter, and *noise* from *aircrafts* is managed within the Noise Chapter. Private and commercial motorised water vessels and non-motorised *commercial activities* are also subject to the provisions of the Activities on the Surface Water chapter.

In addition to their primary function of providing for the movement of people and commodities, *road* ~~and rail~~ corridors are also suitable for the co-location of communication and other infrastructure services, including water supply, drainage and power. National Environmental Standards under the Resource

Management Act 1991, and other legislation (for example, the Electricity Act and Telecommunications Act), enable a range of *structures* to be situated on legal *roads*. Activities and *structures* not provided for by these other legislative means are considered in the Infrastructure chapter.

Bus shelters, public seating, statues and gardens are located within legal *roads*, while within commercial areas, *retailing activities* and dining activities are also undertaken. These activities may be subject to Council bylaws or require separate Council approval, and approval of ~~Waka Kotahi~~ New Zealand Transport Agency is also required for activities on land within the legal state highway.

The District Plan controls land use activities and the manner in which they interact with, and are affected by, transportation activities. That includes the appropriateness of activities adjoining, or in close proximity to, transport routes by applying *setbacks* in some cases and assessing the appropriateness of accesses onto major *roads*. The plan also provides standards for the design of the transportation network, including *roads*, private access, *footpaths* and parking areas.

Objectives

TRANS-O1 A *transport network* is provided that is safe, effective, and efficient in moving people and commodities within, to, through and from the Gore District.

TRANS-O2 The function and operation of the *transport network* is not compromised by land use activities and *subdivision* development.

TRANS-O3 Adverse *effects* from the construction, maintenance, upgrade and use of the *transport network* are managed.

TRANS-O4 The planning and development of *transport networks* integrates with, and connects to, current and future land uses.

TRANS-O5 Opportunities for energy efficient transport options and socially inclusive transport choices that are safe and accessible for all users are enhanced, including public transport, and modes of transport that are non-motorised or which utilise renewable energy sources.

TRANS-O6 Infrastructure and other compatible activities that benefit the community are located, where practicable, within *road* ~~and rail~~ corridors.

TRANS-O7 Sufficient public parking is provided within the Gore Town Centre Zone and Mataura Local Centre Zone to meet the social, economic, and cultural needs of the community, businesses and other activities located there.

Policies

TRANS-P1 Identify and provide for the design of the *transport network* based on the One Network Framework hierarchy including the following *street categories* based on the type of movement, location, use and function *(note: this policy will be implemented when the One Network Framework has been finalised)*:

Rural

1. *Interregional Connectors*

2. *Stopping Places*
3. *Rural Connectors*
4. *Peri-urban Roads*
5. *Rural Roads*

Urban

6. *Transit Corridors*
7. *Urban Connectors*
8. *City Hubs*
9. *Civic Spaces*
10. *Main Streets*
11. *Activity Streets*
12. *Local Streets*

TRANS-P2 Recognise and protect the function of the *transport network* based on the identified *street category* and their local, regional or national significance by managing nearby land use, *subdivision* and development. Ensure that incompatible or *sensitive activities, buildings* and *structures* do not impact on the safe and efficient operation of the *transport network* by requiring appropriate separation or design to minimise adverse noise, amenity, health and safety and/or *reverse sensitivity effects*.

TRANS-P3 Enable the establishment and maintenance of *land transport infrastructure* that connects current and future *land* uses with transport routes that support the movement of people and goods and includes trains, motorised vehicles, non-motorised modes of transport, ~~and~~ pedestrians and cyclists.

TRANS-P4 Enable the location of *land transport infrastructure*, and where practical promote co-location of *network utilities* and other compatible *infrastructure* or activities, within *road* ~~and rail~~ corridors where the function, safety and efficiency of the *transport network* will not be compromised, while managing the scale and types of works and activities.

TRANS-P5 Provide for a diverse range of *aviation activities* and associated air transport infrastructure within the Airport Zone which support the economic sustainability of the airfield and the economic, cultural and social needs of the community, and allow for *buildings*, other *structures* and trees within the flight control paths of airfields where the *height* of these does not impact on the safety of *aircraft* landing and taking-off.

TRANS-P6 Encourage modes of transport that provide lower emissions options, such as public transport or vehicles that uses renewable energy sources, and provide for *active transport* modes, such as cycling and walking, that encourages a reduced reliance on motorised vehicles, by requiring associated land infrastructure to be planned and provided for in the design of the *transport network.*

TRANS-P7 Provide for a *transport network* that is safe and accessible to all people in the community, including the young and old and those with impairments or disabilities, by requiring the provision of appropriately designed and located foot and cycle paths, vehicle parking and *vehicle crossings.*

TRANS-P8 Provide for a safe and efficient *transport network* by ensuring location, design and construction standards for *land transport infrastructure* are met that require:

1. *vehicle crossings* to be located and have appropriate separation and sight distances for the type of *road*, speed environment and proximity to level crossings, intersections and/or existing *vehicle crossings;*
2. visibility to be maintained at railway crossings and *road* intersections;
3. minimum dimensions and formation standards for the category and type of *road*, intersection, *access* or crossing;
4. surfacing and drainage of *roads*, private *access* ways and *vehicle crossings;*
5. manoeuvring space for vehicles *access* and parking areas.

TRANS-P9 Manage the direct *access* to and from sites adjoining heavy traffic by-pass routes and high speed and movement *roads*, and where the type, location and/or frequency of *vehicle movements* to and from the *site* has the potential to create a hazard for users of the *road*, including pedestrians, to ensure that these do not adversely affect the safety and efficiency of the *transport network.*

TRANS-P10 Manage high trip generating activities and the *effects* of *vehicle movements* on the *transport network* to ensure that:

1. the location and design of *vehicle crossings* and the *effects* of the type and level of traffic generated is appropriate for the capacity of the *transport network* in that locality;
2. the activity does not negatively impact on the safety of other users; and
3. the activity is ~~compatible with~~ ~~the character~~ consistent with the function and purpose of the *street category* and compatible with the character and amenity of the surrounding area.

TRANS-P11 Manage the actual or potential *effects* from the design, location and operation of the *transport network* on ~~Ngāi Tahu cultural values and recognise the underlying relationship Ngāi Tahu hold with the natural environment by its design and location~~ mana whenua and the values they associate with the natural environment and the area, including whakapapa, the mauri of whenua and wai, access to mahinga kai, disturbance of wāhi tapu or other taonga, and encourage the urban design of a streetscape, with *land transport infrastructure* such as *street furniture* and artwork, ~~that contributes~~ which recognise and reflect to the unique Ngāi Tahu cultural identity of the district.

TRANS-P12 Managing the adverse *effects* from the use, design and location of the *transport network* and *land transport infrastructure* on the natural *environment* by ensuring appropriate *stormwater* treatment and management, and limiting the presence and *effects* on outstanding natural features and landscapes, ecosystems and indigenous *biodiversity* unless there are no practical alternatives.

TRANS-P13 Prepare and implement a parking strategy for the Gore Town Centre Zone and Mataura Local Centre Zone that recognises and provides for the volume and nature of parking and deliveries required for activities to be safely and efficiently carried out in those areas.

Notes

Note 1	**Provisions in Other Chapters**
	The provisions in this chapter apply in addition to the provisions of the other chapters in the District Plan and the plan should be read as a whole. This chapter also implements other chapters in the District Plan that do not have specific rules such as Sites and Areas of Significance to Māori and Mana Whenua.
Note 2	**Gore District Council Subdivision and Land Development Engineering Standards**
	The Gore District Council Subdivision and Land Development Bylaw 2019 provides layout and design standards that apply to construction and *land* development activities. In addition to the requirements of the District Plan, compliance is the required with the provisions and processes of the Bylaw, or any subsequent Council Engineering Code of Practice replacing it.
Note 3	**Approval Required from *Road Controlling Authority* or KiwiRail**
	The approval is required from the *road controlling authority* where work is being undertaken, *structures* built, or use made of land within legal *roads*. The *road controlling authority* is: • ~~Waka Kotahi~~ New Zealand Transport Agency for all state highways; or • the Gore District Council for all other *roads*, including unformed legal *roads*. Any works undertaken within the legal rail corridor, including creation of any crossing, requires the approval of KiwiRail.

Rules

TRANS-R1	**The establishment, construction, operation, maintenance and upgrading of the *transport network* and *land transport infrastructure.***	
All Zones	**Activity status:** Permitted 1. Where the *land* is: (a) legal *road* and the work is being undertaken by, or on behalf of, a *road controlling authority*; or (b) ~~within a~~ legal~~ly established~~ rail corridor and the work is being undertaken by, or on behalf of, the railway owner or operator. 2. The *transport network* and *land transport infrastructure* are designed, formed, surfaced and drained in accordance with all Transport Standards; and 3. The *land* is not within an area or *site* identified as: (a) *Historic Heritage site* or setting; or (b) *root protection area* of a *Notable Tree*; or (c) Outstanding Natural Feature or Outstanding Natural Landscape; or (d) *Significant Natural Area* *or highly mobile fauna area.*	**Activity status where compliance is not achieved:** Discretionary
TRANS-R2	**Vehicle *access* to a formed *road***	
All Zones	**Activity status:** Permitted Any new *access* or an increase in use of an~~d~~ existing *access* is permitted where: 1. The *access* is not:	**Activity status where compliance is not achieved:** Restricted Discretionary. **Matters of discretion:**

	(a) connecting to a State Highway; or (b) ~~(a)~~ to an ~~*interregional Connector*~~, ~~*Rural Connector* where it is a State Highway~~, *Urban Connector*, Main or *activity Street*; or (c) ~~(b)~~ connecting to a *heavy vehicle bypass route*; or (d) ~~(c)~~ within 30m of a~~n at-grade~~ railway level crossing. *Note: Advice should be sought from ~~Waka Kotahi~~ New Zealand Transport Agency where the vehicle access connects to a State Highway, or KiwiRail Holdings Limited where the vehicle access crosses a railway line (private or public crossing) or a railway level crossing.* 2. The layout of activities on the *site* provides for the manoeuvring of vehicles to enable their forward movement onto and from the *site* without utilising that portion of a *road* available to traffic moving in the opposite direction. *Note: Refer to swept path and design for 90th percentile car in the TRANS-APP Standard Construction Drawings.* 3. The vehicle access is designed, formed, surfaced and drained in accordance with Transport Standards TRANS-S3, TRANS-S4, TRANS-S5, TRANS-S6, TRANS-S7, TRANS-S8 and TRANS-S9.	1. The *effects* on the safety of vehicles, and other users, on, entering or leaving the *transport network.* 2. Impacts on the efficiency of the *transport network.* 3. Availability of legal *access* to the *site* from other *roads*. 4. The matters of discretion in the infringed Standard(s).
TRANS-R3	***Buildings*, other *structures* and trees within the mapped approach vectors**	
All Zones	**Activity status:** Permitted Where:	**Activity status where compliance not achieved:** Non-complying

	1. The *height* of the building, other *structure* or trees complies with the limits specified for the Mandeville and Charlton Airfields shown on the Planning Maps.	
TRANS-R4	**Sightlines at railway level crossings**	
All Zones	**Activity status:** Permitted Where: 1. Compliance is achieved with TRANS-S8	**Activity status where compliance is not achieved**: Restricted Discretionary Matters of discretion: 1. The potential for adverse effects on the safety and efficiency of the rail network. *Note: Applications under this rule must provide, in addition to the standard information requirements, evidence of engagement with KiwiRail.*
TRANS-R45	**High Trip generation at existing and proposed property accesses**	
All Zones except Field Days, Sports and Active Recreation Zones and Camp Columba Zone	**Activity status:** Restricted Discretionary Where: 1. Any new activities or an increase of existing activities, individually or collectively on a site, generate more than: ~~250 *vehicle movements* per day~~ 100 Equivalent Car Movements Per Day in accordance with the table below **Vehicle Type** / **Light vehicle equivalent** / **Movements Constituting 100 trips** Light / 1 / 100 Truck / 3 / 33.3	**Activity status where compliance not achieved:** N/A

Truck and trailer	5	20

Except that this ~~Note: The~~ rule does not apply to vehicle movements associated with *temporary activities* or *construction activities* where these activities are either authorised by a resource consent or are permitted by plan rules.

Note: Advice should be sought from ~~Waka Kotahi~~ New Zealand Transport Agency where the vehicle access connects to a State Highway.

Matters of discretion:

1. The extent to which the number, pattern and/or timing of traffic movements is likely to adversely affect the *amenity values* and character of the immediate and surrounding area.

2. The impacts on the efficiency and safety of the *transport network* and the suitability of the location for the intensity and scale of the activity, and *effects* on the safety of vehicles, and other users.

3. The location, design and construction standard of the access, and any *road* upgrading works required and ongoing *effects* on *road* maintenance as a result of the activity, and the financial contribution to them.

4. Construction *effects* and traffic movements including *effects* on *amenity values*.

Standards

TRANS-S1	On-site parking	
All Zones	1. Vehicle parking spaces, where provided, are to be designed in accordance with TRANS-Table-S1 Parking and *Access* Layouts. 2. The surface of all *vehicle parking areas* within the *urban area,* shall be sealed and all parking spaces associated with non-residential activities marked. 3. Any off-street *vehicle parking area* providing for more than 5 cars shall comply with the following standards: (a) for every 20 square metres of off-street parking, one square metre of landscaping, either trees or shrubs, shall be provided. (b) off-street parking areas located adjoining or within Residential Zones, shall be provided with a solid screen 1.8 metres above the level of the parking, of a design that prevents car lights from shining onto adjoining sites.	**Activity status where compliance is not achieved:** Restricted Discretionary. **Matters of discretion:** 1. The *effects* on the safety and functionality of the *transport network.* 2. The *effects* on the amenity of any adjoining residential site. 3. *Pedestrian* safety and amenity. 4. *Effects* on people that are mobility impaired, and whether they can safely and effectively park and enter and exit a vehicle and manoeuvre around it. 5. The extent to which the car parking area includes landscaping or other features designed to provide amenity, environmental benefits, and visual relief. 6. Whether permeable surfaces are suitable for the location and the type of surfacing proposed, the method of installation and maintenance.

TABLE-S1 Parking and *Access* Layout

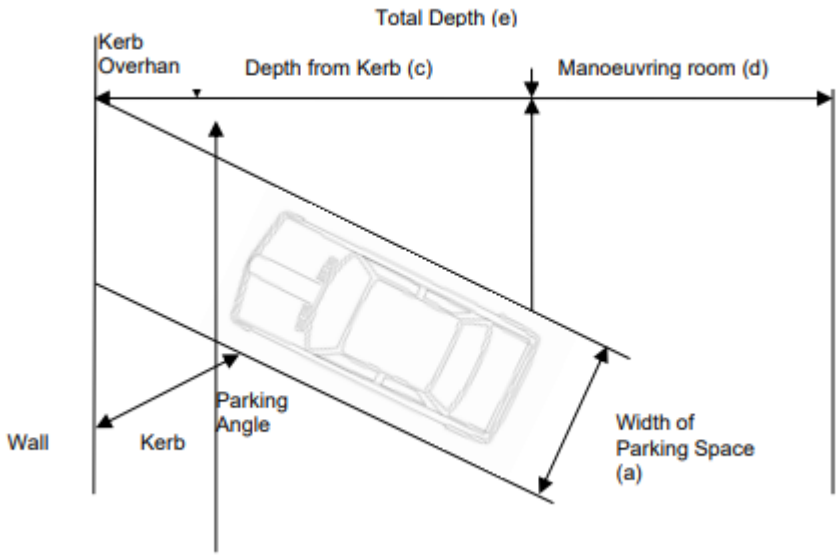

Type of Parking		Stall width (a)	Stall depth		Manoeuvre width (d)	Total depth (e)	
Parking angle	Type		From wall (b)	From *kerb* (c)		One row	Two rows
		All measurements are in metres					
90°	Nose in	2.4	5.1	4.1	7.9	13.0	18.1
		2.5			7.6	12.7	17.8
		2.6			7.2	12.3	17.4
		2.7			6.8	11.9	17.0
75°	Nose in	2.4	5.4	4.4	6.4	11.8	17.3
		2.5			5.8	11.2	16.6

		2.6			5.2	10.6	16
		2.7			4.6	10.0	15.4
60°	Nose in	2.4	5.4	4.5	4.5	9.9	15.3
		2.5			4.2	9.6	15.0
		2.6			3.9	9.3	14.7
		2.7			3.6	9.0	14.4
45°	Nose in	2.4	5.0	4.2	3.6	8.6	13.6
		2.5			3.5	8.5	13.5
		2.6			3.4	8.4	13.4
		2.7			3.3	8.3	13.3
30°	Nose in	2.4	4.3	3.7	3.0	7.3	11.6
		2.5					
		2.6					
		2.7					
0°	Parallel	2.5	Stall length 6.0		3.7	6.2	8.7

~~Notes~~ Design requirements

1. Parallel parking spaces (Parking angle - 0°) shall be 6.0 metres long, except where one end of the space is not obstructed in which case the length of a space may be reduced to 5.0 metres.
2. Where parking spaces are available for use by the general public a minimum width of 2.5 metres shall apply.
3. Minimum aisle and accessway widths shall be 3.0 metres for one way flow and 5.5 metres for two way flow.

   Note: Recommended aisle and accessway widths are 3.5 metres for one way flow and 6.0 metres for two way flow.
4. Maximum *kerb height* = 150mm.

5. In addition to the minimum requirements for a standard car, as shown above, a minimum stall width of 3.0 metres shall be allowed for angled disabled parking.

~~6. Where there are likely to be a high incidence of vehicles larger than the standard size, such as campervans or SUVs, the Council may require that to be taken into account in the size and width of parking spaces provided. Guidelines on lighting, carpark surface and other issues may be found in the Traffic Control Devices Manual Part 13 (http://www.nzta.govt.nz/resources/traffic-control-devices-manual) and should be considered in the overall scheme.~~

7. On-*road* parking requirements shall meet the requirements of the New Zealand Transport Authority Traffic Control Devices Manual. (http://www.nzta.govt.nz/resources/traffic-control-devices-manual)

8. All disabled car parks shall meet a minimum stall width of 3.0m

Disabled Parking from NZS 4121

Not less than 1 accessible space per 1-20 total car park spaces

Not less than 2 accessible spaces per 21-50 total car park spaces

Not less than 1 accessible space for every additional 50 car park spaces

Note:

Where there are likely to be a high incidence of vehicles larger than the standard size, such as campervans or SUVs, the Council may require that to be taken into account in the size and width of parking spaces provided.

Guidelines on lighting, carpark surface and other issues may be found in the Traffic Control Devices Manual Part 13 (http://www.nzta.govt.nz/resources/traffic-control-devices-manual) and should be considered in the overall scheme.

TRANS-S2	**Minimum on-site loading**	
All Zones excluding Gore Town Centre and Mataura Local Centre Zones	1. For activities with a floor area exceeding 500 square metres, one loading bay must be provided for the largest type of service vehicle or bus that will be on-site at any one time. Except that loading is not required to be provided for *residential activities.*	**Activity status where compliance is not achieved:** Restricted Discretionary. **Matters of discretion:** 1. The *effects* on the safety and efficiency of the *transport network.*

~~TRANS-S3~~	~~***Vehicle movements***~~	
~~**All Zones**~~	~~1. The *vehicle crossing* is for on-site activities that individually or collectively generate less than 60 *vehicle movements* per day.~~	~~**Activity status where compliance is not achieved:**~~ ~~Restricted Discretionary.~~ ~~**Matters of discretion:**~~ ~~1. The suitability of the location, construction standard and design of the *vehicle access* and *vehicle crossing*.~~ ~~2. The *effects* on the safety and efficiency of the *transport network*.~~ ~~3. The extent to which the number, pattern and/or timing of traffic movements is likely to adversely affect the *amenity values* and character of the immediate and surrounding area.~~
TRANS-S4	**Firefighting *vehicle access***	
All Zones	1. Where a *vehicle access:* (a) terminates more than 135 metres from a hydrant with sufficient flow for firefighting purposes at the property; or (b) A *vehicle access* is longer than 30 metres The *vehicle access* and *vehicle crossings* must be designed, constructed and maintained to provide for emergency services *vehicle access* as follows: (i) *vehicle crossing* width of at least 3.5 metres; and (ii) *carriageway* width of at least 4m; and (iii) *height* clearance of at least 4m.	**Activity status where compliance is not achieved:** Restricted Discretionary. **Matters of discretion:** 1. The suitability of the location, construction standard and design of the *vehicle access* and *vehicle crossing*. 2. The *effects* on the safety and efficiency of the *transport network.* 3. The ability to provide an adequate and reliable firefighting *access* to a *site* and/or *structure* and gain *access* to a firefighting water supply.

TRANS-S5	***Vehicle crossing* design and construction**	
All Zones	All *vehicle crossings* shall be designed, formed, surfaced and drained to: 1. Have gradients that: (a) enable the 99th percentile car to use them without grounding any part of the vehicle <u>by ensuring grade transitions which do not exceed 12.5 percent (crest) or 15 percent (sag)</u>; and (b) have an ascending gradient of no more than 5 percent (1 in 20) within 6 metres of the closest side edge of a *footpath* or *pedestrian* through route. 2. Have a drop *kerb* design in accordance with TRANS-APP Standard Construction Drawing R03, or where necessary a slot crossing design, and a landing with a crossfall should of less than two percent across any *footpath* in accordance with TRANS-APP Standard Construction Drawing and R05 within the *urban area.* 3. Not obstruct any side *drain* and control *stormwater* and debris run-off. Where the side *drain* is of an unsuitable shape or carries flows for significant parts of the year the side *drain* shall be piped under the crossing. Pipes and end treatments shall be sized appropriately for the catchment intercepted but shall be a minimum of 200 mm diameter. Culverts shall extend a minimum of 1 m beyond the edges of the crossing.	**Activity status where compliance is not achieved:** Restricted Discretionary. **Matters of discretion:** 1. The *effects* on the safety and efficiency of the *transport network.* 2. *Pedestrian* safety and amenity. *Note: For more detailed vehicle and driveway crossing design guidance, refer to the NZTA Pedestrian planning and design guide.* 3. *Stormwater* management and design, including the *effects* on *water* quality and the alteration and the *effects* of any overland flow paths.

4. Be surfaced as follows:

   (a) within the *urban area* sealed from the *carriageway* to the property *boundary* with asphalt or concrete or paving stone as approved by the Council;

   (b) within the *rural area* surfaced to the standard of the *road* surface from the *carriageway* edge to the property *boundary*. If the *access* slopes up from a sealed *road* the crossing shall be sealed for a minimum distance of 10 m from the edge of the *carriageway*.

5. Be designed and constructed in accordance with TRANS-Table-S5 and TRANS-APP Standard Construction Drawings.

   Except for access on to a state highway where the design standards are set out in the New Zealand Transport Agency Planning Policy Manual (2007), including Diagram C and Diagram E for rural access.

TABLE-S5 Required construction standards and dimensions			
	Residential	**Commercial and Industrial**	**Rural** applies to all roads except State highways

		Single lane	Double lane	Private (less than ~~2~~3 residential units or farm paddock)	High use or Commercial - All *roads* except ~~State Highways or~~ accesses on to *Rural Connectors* which are expected to have greater than 5000 daily traffic movements	Milktanker – *Interregional connectors* and *Rural Connectors* ~~(if this is a State Highway)~~
Standard Construction Drawing	R03-1/R03-2	R04/R03-2		R09 – 1	R09 –2	R09 – 3
Width (m) at property *boundary* (urban) or entranceway (rural)	3	3.5	6.0	4.5	4.5	6
Width (m) at *kerb* line or edge of seal excluding transitions at each end of crossing	3.5	7	9.5	Refer to drawings		

TRANS-S6	**Sight distance for *vehicle crossings***	
All Zones	1. Visibility at the *access* point (as shown in the Table-S6 diagram), measured at 1.15 metres above the ground, must comply with the sight distances specified in TRANS-Table-S6 in both directions.	**Activity status where compliance is not achieved:** Restricted Discretionary. **Matters of discretion:** 1. The *effects* on the safety and efficiency of the *transport network.*

TABLE-S6 Required Sight Distances			
Posted Speed Limit (kph)	**85th percentile operating speed, measured at the site (or if above not known, posted speed plus 10km/h**	**TBC ~~Regional and Primary Collector *Roads*~~ including state highways (metres)**	**Other *Roads* (metres)**
50 and less	**60**	113	55

60	**<u>70</u>**	140	85
70	**<u>80</u>**	170	105
80	**<u>90</u>**	203	135
100	**<u>110</u>**	282	210

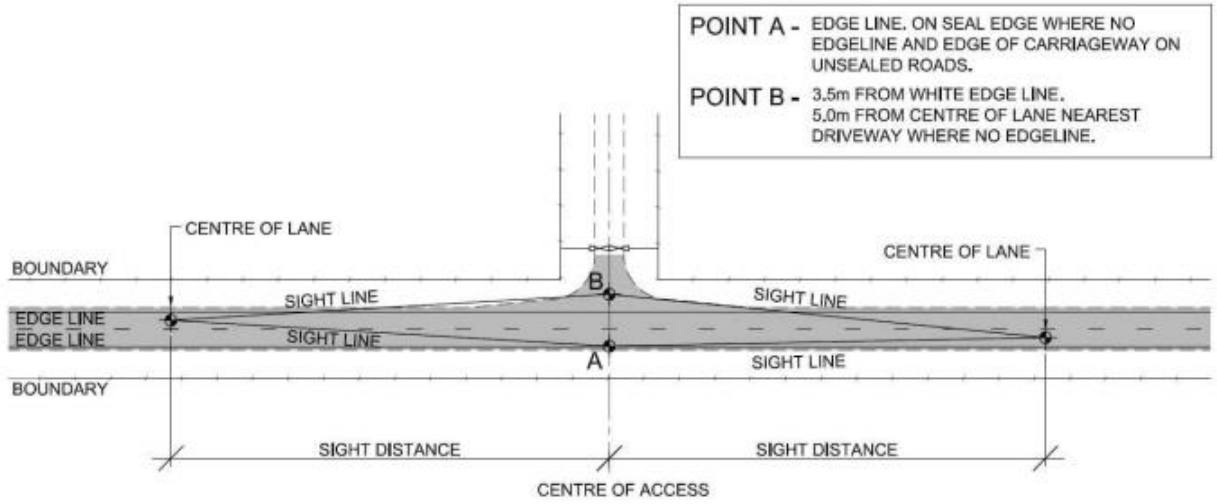

TRANS-S7	**Separation of *vehicle crossings* from intersections and other *vehicle crossings***	
All Zones	1. Each *vehicle crossing* shall be located to comply with the distances specified in TRANS-Table-S7.1 from any adjacent *vehicle crossing,* and TRANS-Table-S7.2 from any intersection (as shown in the table diagram).	**Activity status where compliance is not achieved:** Restricted Discretionary. **Matters of discretion:** 1. The *effects* on the safety and efficiency of the *transport network.*

TABLE-S7.1	**Required distance from adjacent *vehicle crossing***

	State Highways and Connector *Roads* (metres)		Other *Roads* (metres)	
Posted Speed Limit (kph)	Urban	Rural	Urban	Rural
50 and less	7.5	-	-	-
60	7.5	-	-	-
70	7.5	40		50
80	100	100	50	50
100	200	200	50	50

TABLE-S7.2 Required distances from intersections

	State Highways and Connector *Roads* (metres)		Other *Roads* (metres)	
Posted Speed Limit (kph)	Distance K	Distance M	Distance K	Distance M
50 and less	30	20	19	9
60	30	20	19	9
70	100	45	19	9
80	100	45	60	60
100	200	60	60	60

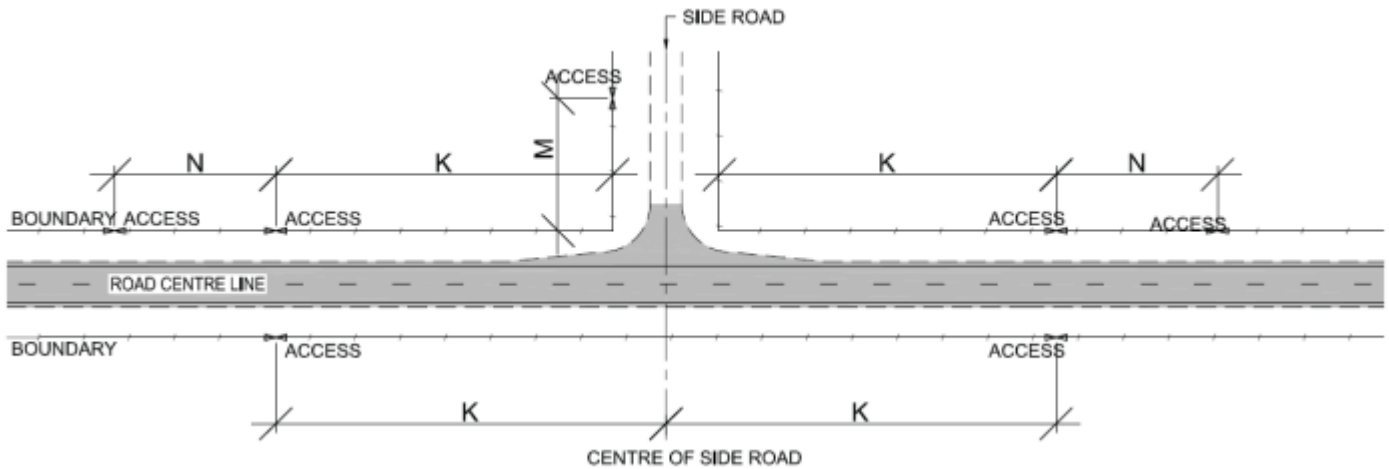

TRANS-S8	***Structures* and vegetation near level crossings**	
All Zones	1. *Buildings*, *structures*, planting or other visual obstructions must not be located within the restart or approach sightline areas of railway level crossings as shown in the shaded areas of TRANS-S8-Figure 1: Restart Sightlines and TRANS-S8 Figure 2: Approach Sightlines below. Except that this does not apply to signs and rail/road devices that are intended to make the level crossing places safer where the work is being undertaken by, or on behalf of, the rail or road controlling authority.	**Activity status where compliance is not achieved:** Restricted Discretionary. **Matters of discretion:** 1. Any adverse *effect* on the safety of the level crossing for trains, vehicles, pedestrians and any other user of the crossing. ~~2. The extent to which vehicles entering and exiting the level crossing can see approaching trains.~~ 2. The extent of intervisibility between approaching users of the railway corridor and the level crossing.

TRANS-S8 Figure 1 Restart Sightlines

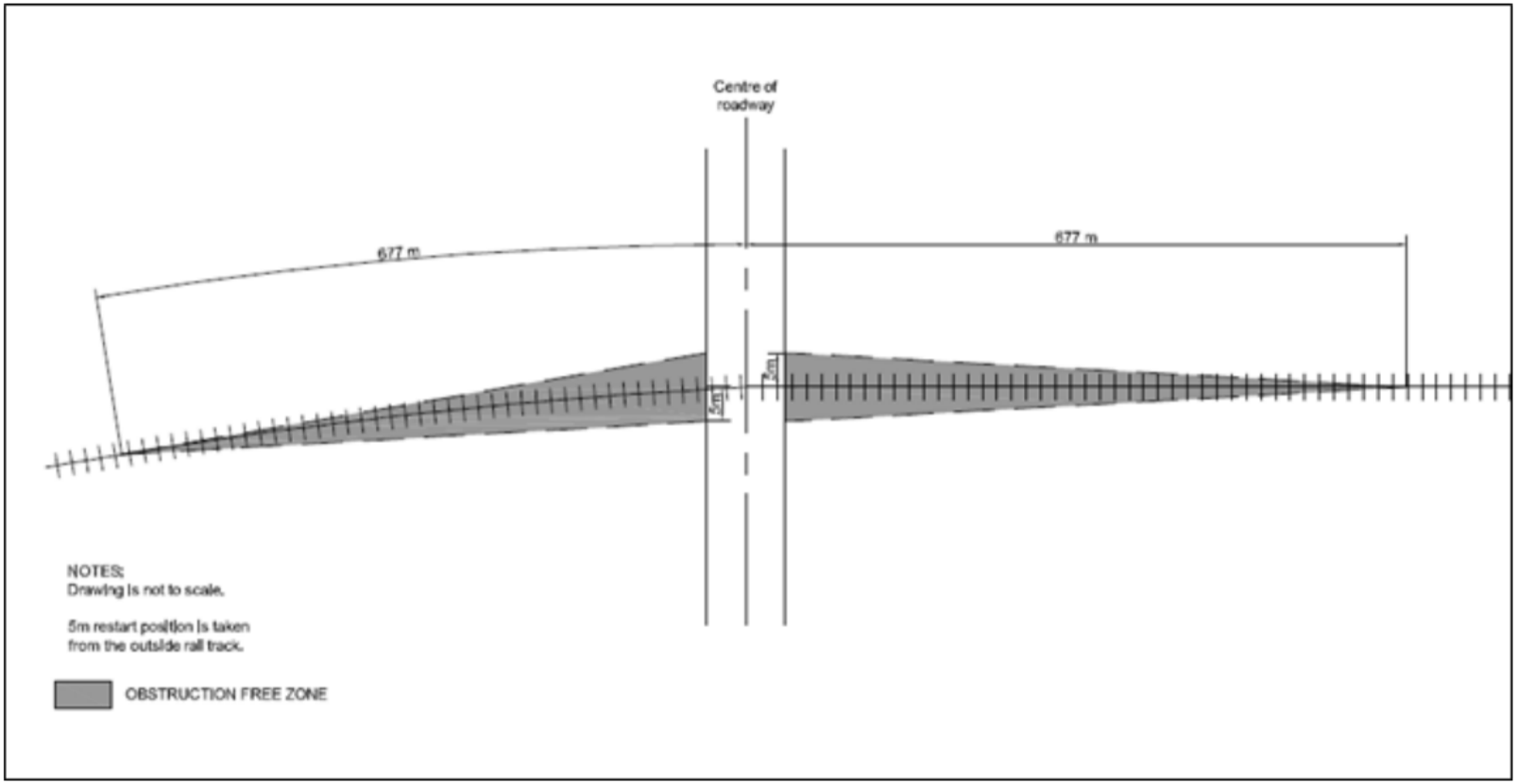

Note: Figure 1 distances shown are 677m and 5m

TRANS-S8 Figure 2 Approach Sightlines

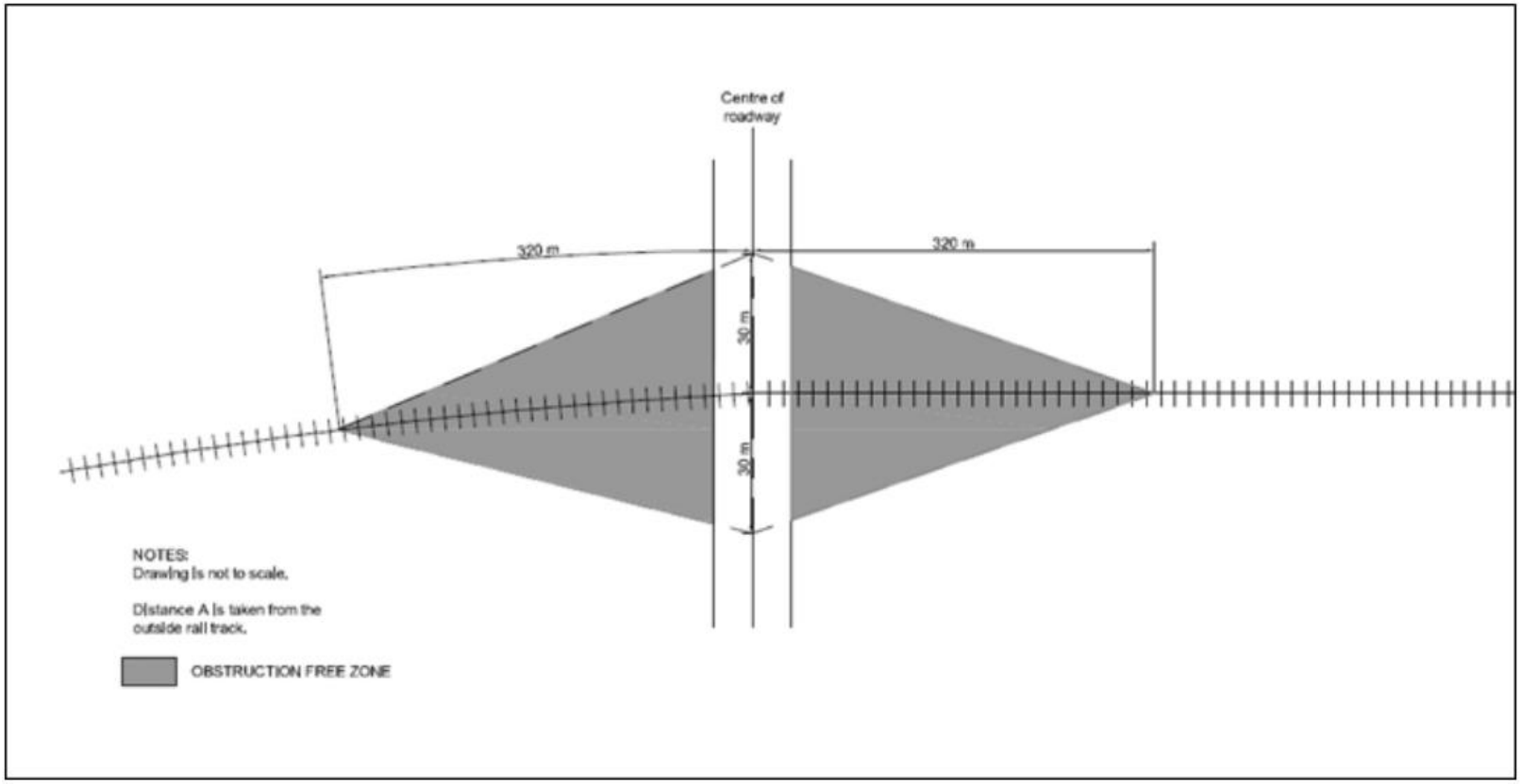

Note: Figure 2 distances shown are 320m and 30m

TRANS-S9	***Private ways*, *private roads*, and other private accesses**	
All Zones	All private *vehicle accesses* shall be designed, formed, surfaced and drained so that: 1. The minimum dimensions are in accordance with TRANS-Table-S10.	**Activity status where compliance is not achieved:** Restricted Discretionary. **Matters of discretion:** 1. The *effects* on the safety and efficiency of the *transport network.*

2. Turning is provided for as follows:

   (a) where the *access* serves three or more rear lots or dwelling units, a maximum 3-point turning head in the common area shall be provided at the end of the access. Circular, L, T, or Y shaped heads are acceptable with the dimensions shown in TRANS-S9 Figure 1; or

   (b) where the *access* serves fewer than three lots or dwelling units, turning heads in the common area are not required where it can be shown that adequate turning area is available within each lot or private area.

3. Centre line grades are not:

   (a) steeper than 1 in 5, ~~except that gradients of 1 in 4.5 may be used over straight lengths of *access* for a distance of up to 20m~~.

   (b) steeper than 1 in 20 for the first 6 metres of any residential access.

   (c) steeper than 1 in 8 for at least 5m and up to the length of the transition required by the largest type of vehicle that will use the *access* on a regular basis for a non-residential accesses.

   (d) less than 1 in 250.

4. Passing is provided for as follows:

   (a) at least every 50 m; or

   (b) up to 100 m spacing where visibility is available from bay to bay within the *rural area;* and

2. Whether the *access* design will have any adverse *effects* on the ease and safety of vehicle manoeuvres.

3. Any adverse *effects* on *amenity values* of other users or neighbouring properties.

4. Any impacts on public waste collection and on-street parking.

5. *Stormwater* management and design, including the *effects* on *water* quality and the alteration and the *effects* of any overland flow paths.

6. Whether permeable surfaces are suitable for the location and the type of surfacing proposed, the method of installation and maintenance.

For each passing area the *access* shall be widened to not less than 5.5 m over a 15 m length.

5. The access is shaped with either crown or crossfall of not less than 2%.

6. It does not obstruct any roadside *drain*, and control *stormwater* and debris run-off on to or off the *road* and away from *buildings*, and where:

   (a) all shared urban accesses shall be surfaced and have their edges defined by a structural edge, and all *stormwater* shall *discharge* via an appropriately sized and designed *stormwater* system.

   Acceptable surfacing for accesses includes asphaltic concrete (~~25~~30 mm minimum thickness), chipseals, in situ concrete or concrete pavers.

   (b) rural accesses shall be formed with edge *drain*s along the sides of the access. The *drain*s shall be located a minimum of 1m from each side of the access. Rural side *drain*s may *discharge* directly to the roadside *drain*, or where accesses pass over the side *drain* they shall be provided with a culvert with a size appropriate for the design flow.

   (c) commercial and industrial accesses shall *drain* from their sumps through a lead directly ~~or~~ through a *stormwater* treatment device to a public *stormwater* main.

   (d) The maximum catchment area of access stormwater runoff permitted to flow at grade over a property boundary is $40m^2$

TRANS-S9 Figure 1 Turning heads
Circular turning head

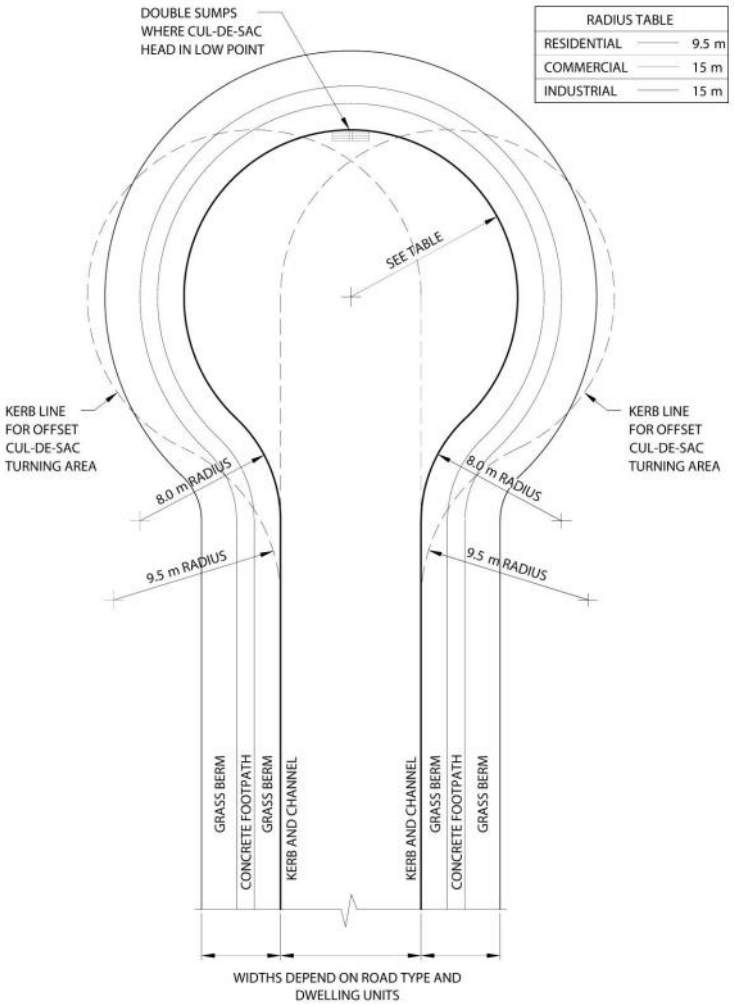

L, T, or Y shaped turning heads

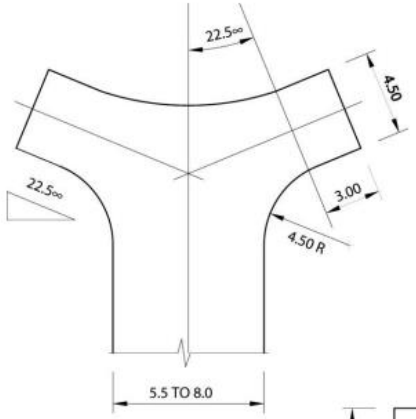

Y TURNING

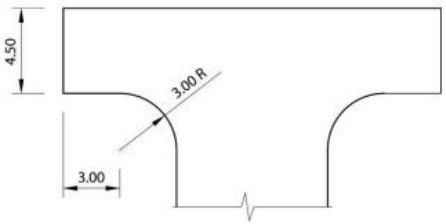

T TURNING

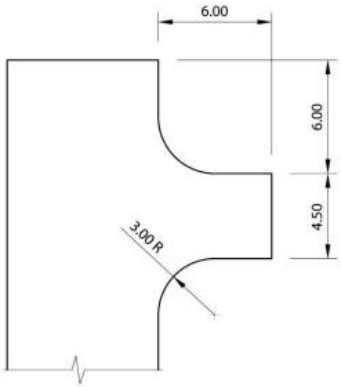

L TURNING

ONLY FOR USE WHERE THE STANDARD CIRCULAR HEAD IS UNSUITABLE OR WHERE APPROVED BY THE TA

ALL DIMENSIONS ARE IN METRES

TRANS-S10	***Road* design requirements**	
All Zones	All *roads* shall be designed, formed, surfaced and drained so that: 1. The minimum dimensions are in accordance with TRANS-Table-S10 and TRANS-APP Standard Construction Drawings. 2. Provision is made for passing as follows: (a) on one lane two-way urban *carriageways* - every 50 m and at corners; (b) at all *rural road* intersections; and (c) in the case of a Cul-de-sac, Right of Way or other shared *vehicle accesses* 6.0 metres or less in width: (i) where it serves more than one *allotment* and is longer than 100m; or (ii) unrestricted visibility is not available over its full length; or (iii) where it serves four or more *allotments* then it shall have a minimum width of 6.0 metres for a distance of 10 metres from the *road boundary.* ~~Each passing area shall be a minimum 2.1m by 6m with appropriate entry and departure tapers outside of the *movement lane.*~~ The minimum widening requirement on all roads except state highways shall be as described in Drawing R09-2. State highway intersections with local roads require specific design approval from NZTA. 3. Road lighting is designed and installed for all new *roads* in accordance with the relevant standards, and new lighting	**Activity status where compliance not achieved:** Restricted Discretionary. **Matters of discretion:** 1. The *effects* on the safety and efficiency of the *transport network.* 2. Whether the *road* design will have any adverse *effects* on the ease and safety of vehicle manoeuvres. 3. Any impacts on service provisions, public waste collection and on-street parking. 4. Whether the design provides for improved connectivity, amenity and safety for pedestrians and cyclists . Note: For more detailed design guidance and user safety, refer to *crime prevention through environmental design (CPTED)* principles. 5. *Stormwater* management and design, including the *effects* on water quality and the alteration and the *effects* of any overland flow paths. 6. Impacts on Ngāi Tahu cultural values, including those listed in the *Mana Whenua* chapter MW-2.3 *Mana Whenua* & Te Taiao Cultural Values.

designs or replacement luminaires must be LED on all *roads* administered by the Council.

Note: For more detailed lighting design standards, refer to the AS/NZS 1158 Lighting for Roads and Public Spaces and NZTA M30 Specification and Guidelines for Road Lighting Design.

4. Cyclists are provided with separate *movement lanes* if identified in a local or regional cycle network.

5. *Footpath*s and cycle paths are designed and constructed in accordance with TRANS-APP Standard Construction Drawings, and with permanent surfacing within the *urban area*.

   Specific design approval from NZTA to accommodate cyclists is required on urban and rural state highways

   Note: For more detailed pedestrian design guidance, refer to the NZTA Pedestrian planning and design guide.

6. The centre line gradient of a public *road* shall not be steeper than 1 in 8, or less than 1 in 250.

7. All *roads*, including *footpaths* and cycleways, are adequately drained in accordance with good engineering practice, and designed to account for *stormwater* and keep potential *groundwater* below structural pavement layers.

8. Cul-de-sac *roads* are designed in accordance with Figure 1 TRANS-S9, and a *pedestrian* link shall be provided at the end of the urban cul-de-sac *roads*. The *pedestrian* link shall be designed so that it is:
   (a) direct and no greater than two properties long;
   (b) have a legal width of at least 5.5m wide;
   (c) *boundary fences* have a maximum *height* of 1.2m; and

(d) provided with *pedestrian* level lighting.

TABLE-S10 Road design requirements								
Street Type	**Units Served**	**Traffic (AADT)**	**Parking Lanes**	**Traffic Lanes**	***Carriageway* Width**	**Formed Shoulder Width**	***Footpaths***	**TRAN**
			All measurements are in metres					
SEALED *ROADS*								
Commercial and Industrial								
Interregional, *Rural* and *Urban Connectors*		500+	2 by 2.5	2 by 3.5	12		2 by 1.4	20
Activity Streets and *Peri-urban Roads*		100-499	1 by 2.5	2 by 3.5	9.5		2 by 1.4	20
Local Streets and *Rural Roads*		0-99	2 by 2.5	1 by 3	8		2 by 1.4	17
Urban Residential								
Urban Connectors	>100	500+	2 by 2.5	2 by 3.5	12		2 by 1.4	20
Activity Streets and *Peri-urban Roads*	21-100	100-499	2 by 2.5	2 by 3	11		2 by 1.4	20
Local Streets	50 max	0-99	2 by 2.5	1 by 3	8		2 by 1.4	20
Cul-de-sac or RoW	20 max		1 by 2.5	1 by 3.5	6		1 by 1.4	15
Private RoW	1 to 3				3.0			3.5 Note ~~4~~3
	4				3.0			4.0
	5				3.0			4.5
	6				5.0			5.0
Pedestrian connection							1 by 1.4	4.0
Rural and Rural Lifestyle								
Inter-regional Collectors		500+		2 by 3.5	7.5			
Rural Connectors		100-499		2 by 3.0	7.0			

Rural Roads	<100	0-99			6.5	1	1 by 1.4	20
Long Cul-de-sac	10-20 max				5.5	1	1 by 0.9	15
Short Cul-de-sac	<5				5	0.75	Nil	12
Private RoW	Up to 5			1 by 3	4	0.5	Nil	6
UNSEALED ROADS								
Rural Roads		100+			6.5+		Nil	
Rural Roads - Local		0-99			4.5-6.5		Nil	
Rural Roads - Track					*Site* specific	Nil		

Notes

1. Urban/Rural definition is based on speed limit, i.e., urban *roads* are those with a speed limit of 70 kph or less, rural is greater than 70 kph
2. *Carriageway* width is defined as *kerb* face to *kerb* face in urban situations.
3. The minimum reserve width of an *access* serving a single household unit may be reduced to 3 metres if the driveway has unrestricted visibility and the length does not exceed 30 metres

TRANS-S11 ***Road* intersections**

All Zones

All *road* intersections shall be designed, formed and surfaced so that:

1. All *carriageways* are sealed for the first 20m from the intersection with another *road.*
2. The angle of a *road* intersection is 90°.
3. The *kerb* radius for *road* intersections are:
   (a) 9m for all *roads* not included in (b) below;
   (b) for all major intersections, including an *interregional connector*, *Urban Connector* or *Activity Street*, and those in *rural areas*, industrial or commercial areas, shall have a minimum *kerb* radius of 15 m.

Activity status where compliance is not achieved:

Restricted Discretionary.

Matters of discretion:

1. The *effects* on the safety and efficiency of the *transport network.*
2. Whether an intersection angle of not less than 70° can be justified by other constraints.

4. Sight lines at intersections are protected by corner visibility splays as follows:
   (a) outside residential areas in all other 50 kph or lower speed environments - corner splays shall be 4m.
   (b) all major intersections, described in 3 (b) above shall have corner splays of 6 m.

   The visibility splays are the triangular shaped area that extends over the corner of the adjoining lot, where the above distance is measured along both boundaries. Within these areas any *structures*, objects and vegetation excluding traffic control devices shall not exceed ~~1.2~~ 0.5 metres in height, other than *fences* of open wire construction.

5. Intersections between *Interregional connector*, *Urban connector* and *Rural Connector roads* shall be a minimum distance of 150 m apart, centre line to centre line.